QUEST MPS® 3
QUEST MPS® 3 ND

Troubleshooting Manual

Keep this manual with the system at all times.

MD QuestMedical.com/eIFU Rx ONLY EN

MPS® 3 and MPS® 3 ND Troubleshooting Manual

Printed in U.S.A.

Manufactured by:
Quest Medical, Inc.
One Allentown Pkwy
Allen, TX 75002-4211
U.S.A.
Phone: +1 (800) 627-0226 or (972) 390 9800
www.questmedical.com

EC REP
CE 0123
EMERGO EUROPE
Westervoortsedijk 60
6827 AT, Arnhem
The Netherlands

Refer to the MPS® 3 or MPS® 3 ND Operations Manuals for more detailed instructions prior to operating either of these systems.

Keep this manual with the system at all times.

If device displays an alarm notification, please refer to the alarm troubleshooting table within this reference and correct the alarm condition accordingly.

Accompanying documents shall be consulted before use of equipment or accessories.

This device is not designed, sold or intended for use except as indicated. In no event shall Quest Medical be responsible for failures, errors or other liabilities resulting from customer's noncompliance with the procedures and precautions outlined herein.

The MPS® 3 sterile disposables are covered under one or more of the following U.S. Patents: 7,842,003 and 8,475,138. Also covered by pending U.S. and International Patents and Patent applications.

MPS® 3 and MPS® 3 ND Troubleshooting Manual

904635 REV E – 01/2024

Table of Contents

This page intentionally blank

1 Introduction

This Troubleshooting Manual is to be used for diagnosing the MPS 3 and MPS 3 ND Systems in case of a system error or failure, and for clearing alarm messages. While these systems have been designed to be intuitive in operation, this manual is an essential aid for the Operator in resolving alarm codes and messages generated by the system. It is also intended for biomedical technicians and staff who are specially trained to perform the more detailed troubleshooting of this equipment.

Keep this manual with the system at all times so it can be easily accessed.

Prior to operation, carefully read through the MPS 3 or MPS 3 ND Systems Operations Manual.

If this troubleshooting manual does not remedy the situation, please call Quest Medical Technical Support at +1 (888) 510-7623.

Only Quest Medical Service personnel or trained technicians and operators should attempt to troubleshoot any MPS 3 or MPS 3 ND System.

This page intentionally blank

2 System Overview

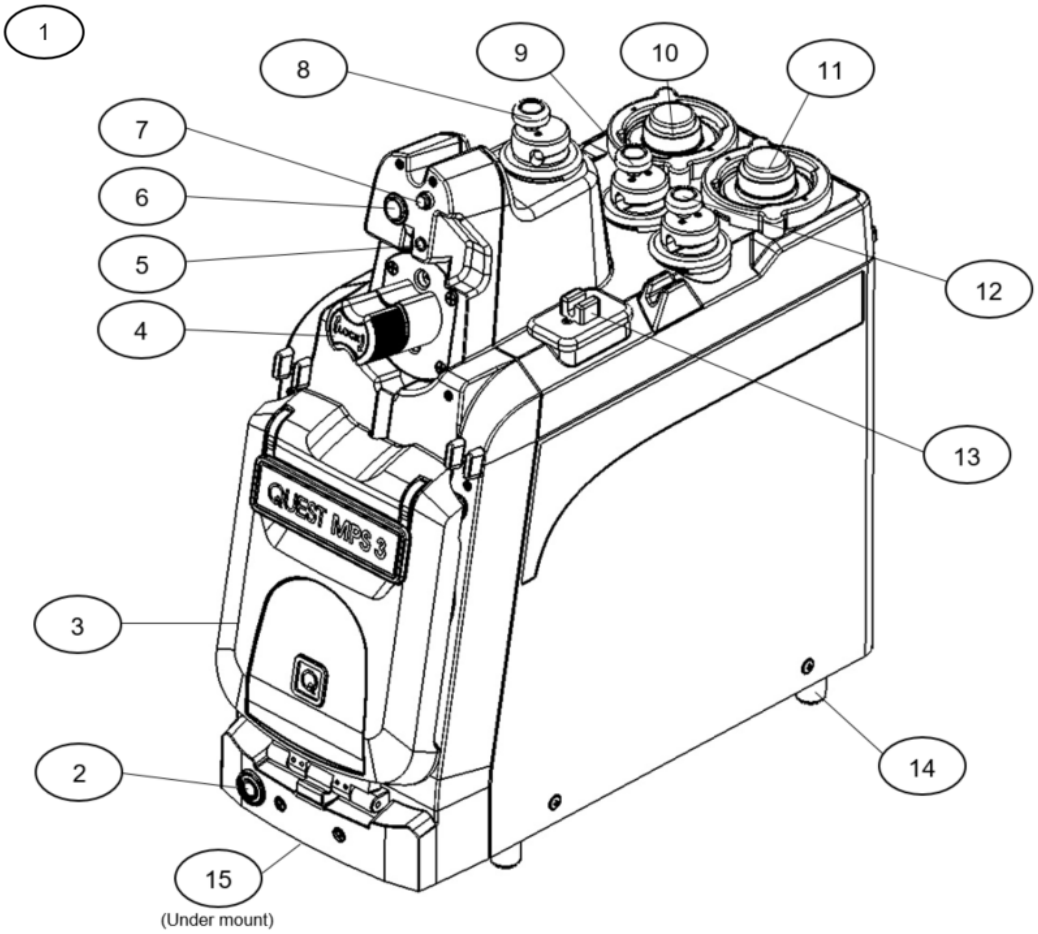

Figure 1: MPS 3 Console Overview

Item	Name	Function
1	MPS 3 Console	
2	Push Button Switch	Sleep (OFF) / Wake (ON)
3	MPS 3 Door	Contain Blood/Crystalloid Cassette
4	Heat Exchanger (HEX) Locking Knob	Secure Heat Exchanger
5	Temperature Sensors	Monitor Delivery Temperature
6	Pressure Transducer	Monitor System Pressure
7	Fluid Level Sensor	Monitor Air in Heat Exchanger
8	Vent Valve	Control Vent Delivery / Expel Air from HEX
9	Retrograde Valve	Control Retrograde Delivery
10	Additive Pump (Green)	Control Additive Delivery
11	Arrest Agent Pump (Yellow)	Control Arrest Agent Delivery
12	Antegrade Valve	Control Antegrade Delivery
13	Air In Line Sensor	Detect Air in Delivery Line
14	Mounting Feet (4X)	Facilitate Mounting
15	Front Handle (under mount)	Facilitate Transport

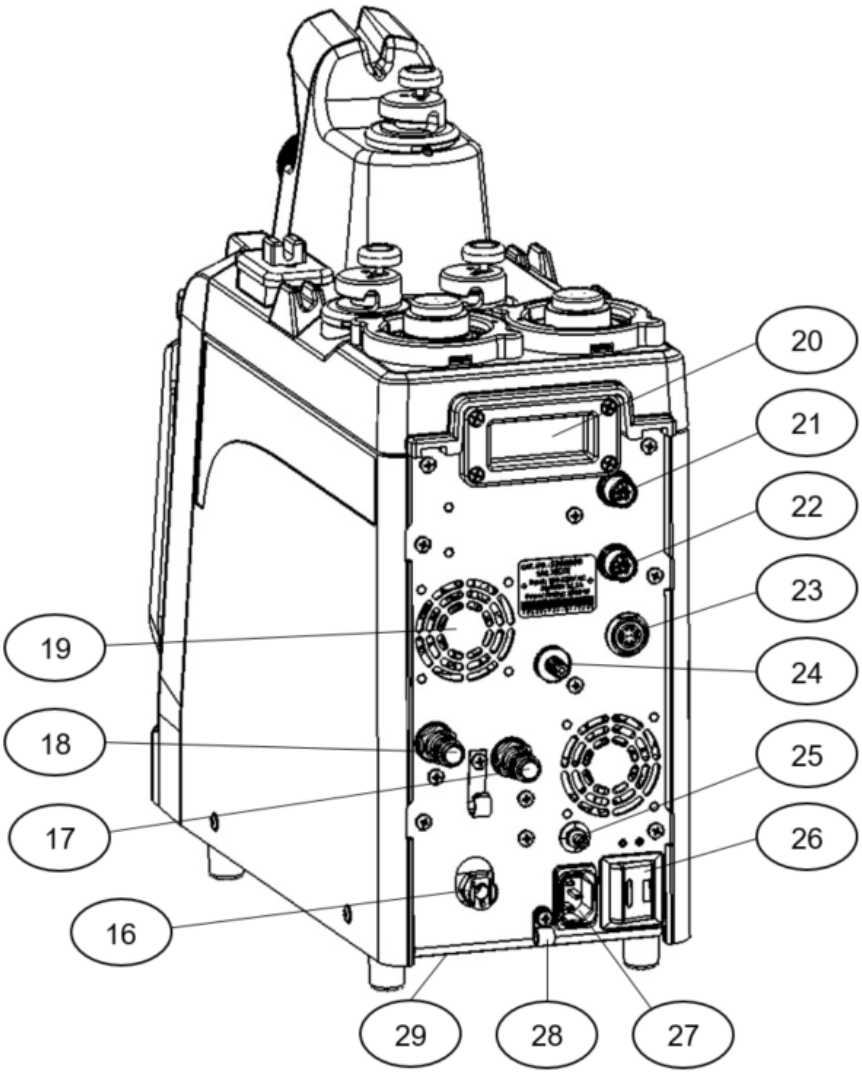

Figure 2: MPS 3 Console Rear Panel

Item	Name	Function
16	Circulation System Drain Port	Drain Circulation System (non-ND only)
17	Water Outlet Port	Water Outlet to Cold Water Source (non-ND only)
18	Water Inlet Port	Water Inlet from Cold Water Source (non-ND only)
19	Cooling Fans (2X)	Maintain Internal Temperature
20	Rear Handle	Facilitate Transport
21	Antegrade Ext. Pressure Connector	Monitor External Antegrade Pressure Transducer
22	Retrograde Ext. Pressure Connector	Monitor External Retrograde Pressure Transducer
23	Console to Controller Comm Port	Connect Console to Controller Cable
24	Medical Air Inlet	Connect Medical Air to Console
25	Ground Equalization Plug	Ground Console
26	Main Power Switch	AC Mains Power Switch
27	Power Plug Socket	Connect AC Mains Power Plug
28	Power Cable Strain Relief	Secure Power Cable
29	Drip Pan Drain Port (under mount)	Drain Drip Pan

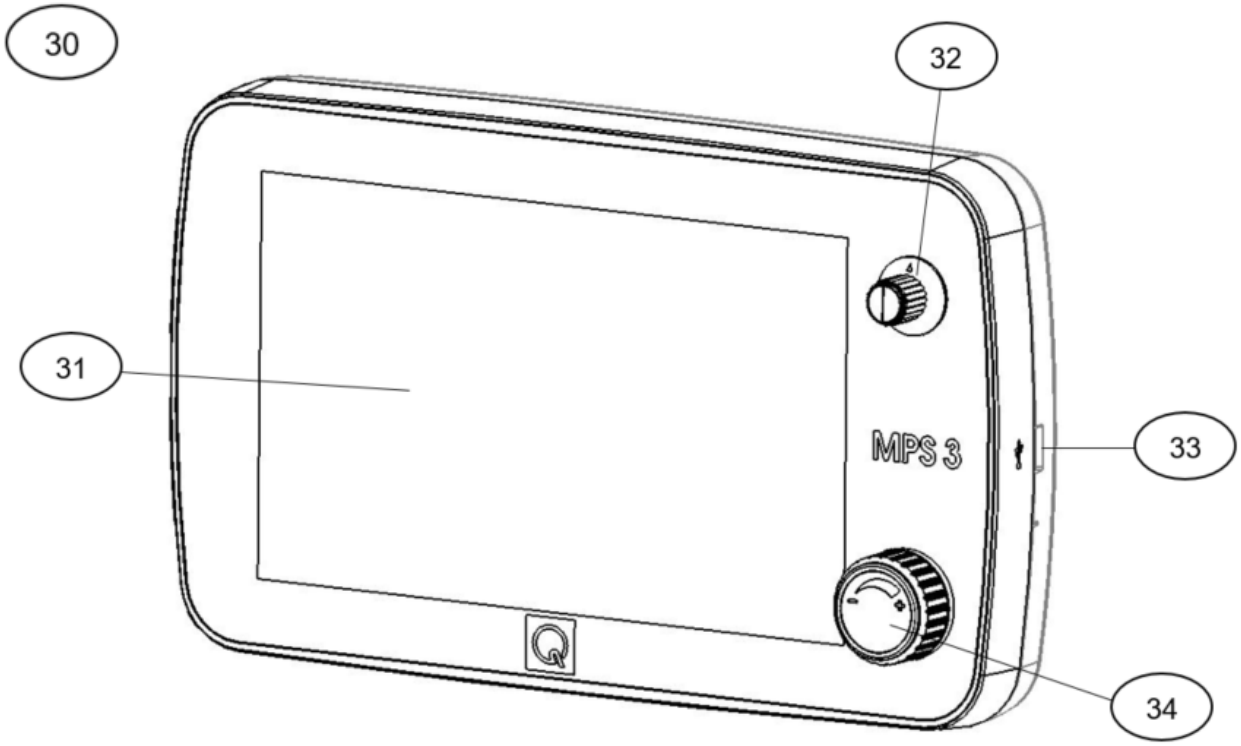

Figure 3: MPS 3 Controller Overview

Item	Name	Function
30	MPS 3 Controller	
31	Touchscreen Display	Monitor / Select / Set Parameters
32	Set Knob	Scroll Through Parameters
33	USB Port	Connect USB Drive
34	Flow Control Knob	Start / Stop Cardioplegia Delivery

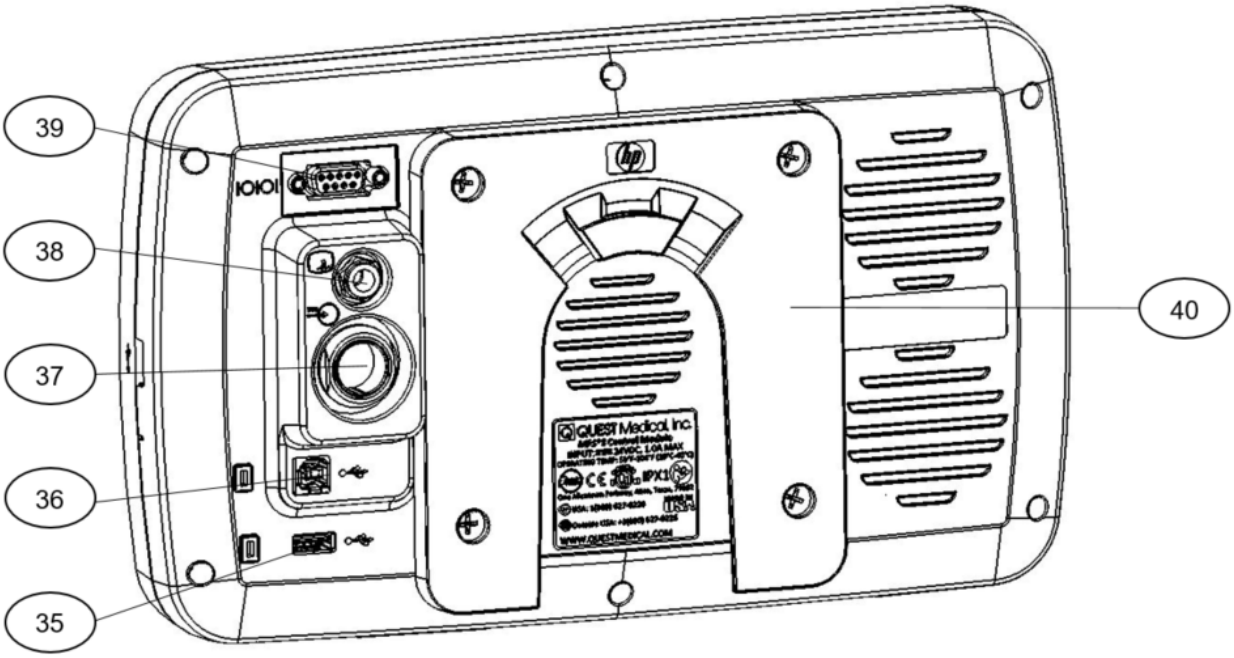

Figure 4: MPS 3 Controller Rear Panel

Item	Name	Function
35	Type A USB Port	Expansion Port
36	Type B USB Port	Service Connection or Electronic Data Management System
37	Communication Cable Port	Connect Console to Controller Communication Cable
38	Analog ECG Port	Connect Analog ECG Cable
39	RS-232 Port	Connect Electronic Data Management System
40	Controller Mounting Bracket	Connect to Controller Mounting Arm

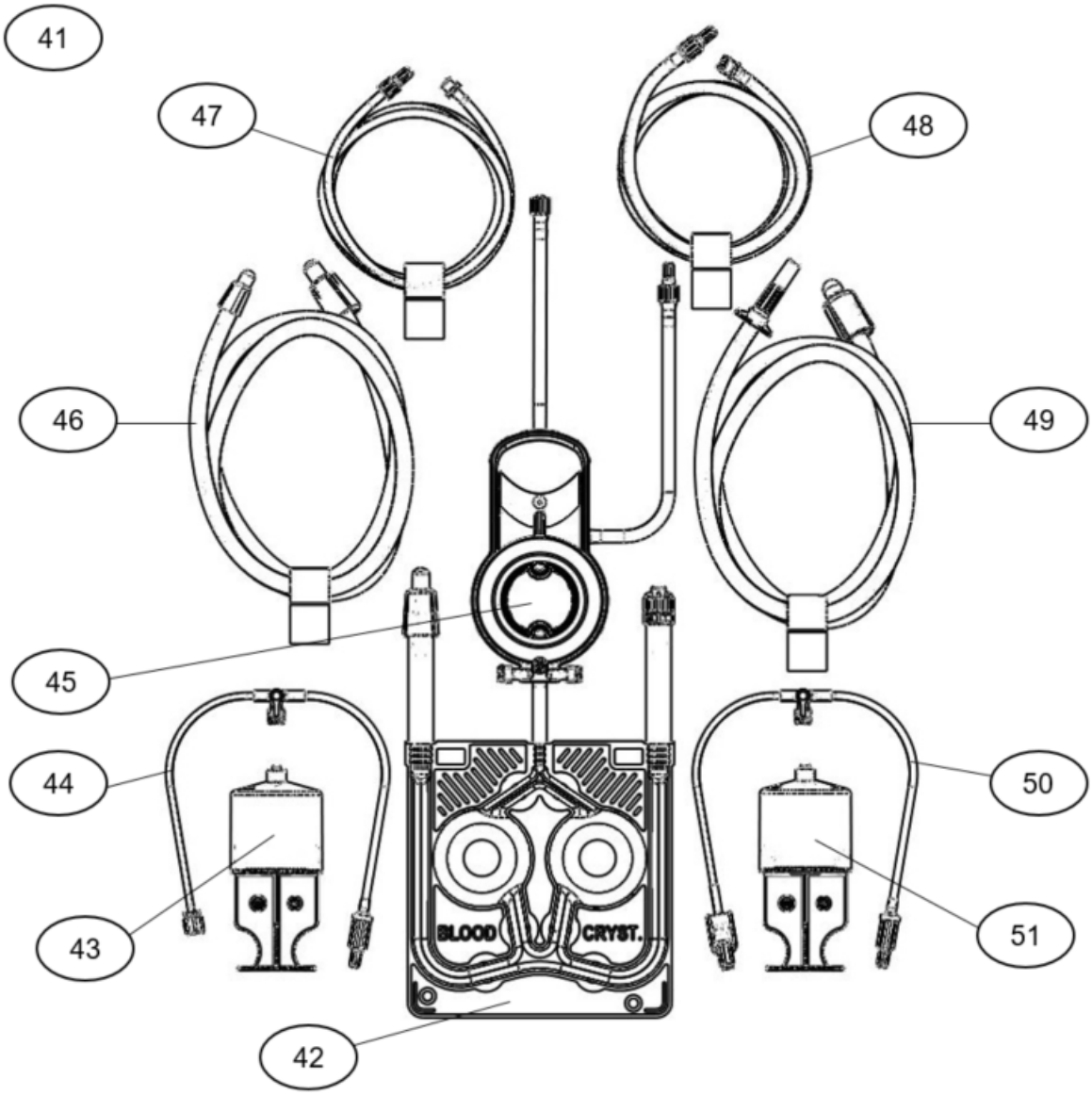

Figure 5: MPS 3 Delivery Set

Item	Name	Function
41	MPS 3 Delivery Set	
42	Blood / Crystalloid Cassette	Ratio Blood / Crystalloid and pump to HEX
43	Additive Cartridge	Deliver Additive
44	Additive Delivery Line	Fill / Refill / Deliver Additive to HEX
45	Heat Exchanger (HEX)	Regulate Temperature of Cardioplegia
46	Blood Source Line	Connect Blood Source to MPS 3 Circuit
47	Vent Line Extension	Connect Vent Line to Reservoir
48	Blood Delivery Extension Line	Line to Table
49	Crystalloid Source Line	Connect Crystalloid Source to MPS 3 Circuit
50	Arrest Agent Delivery Line	Fill / Refill / Deliver Arrest Agent to HEX
51	Arrest Agent Cartridge	Deliver Arrest Agent

This page intentionally blank

3 Alarm Overview

Alarms and errors are notifications to the operator to ensure safe and proper function of the MPS 3 and MPS 3 ND Systems. The alarm message states the alarm (or error) code, a brief description of the alarm, and contains prompts for clearing the alarm. All alarms are recorded in the Alarm Report and may be accessed form the Menu option. The Alarm Report is permanently retained during System power down and during total loss of power events. The oldest alarms in the report are discarded in the event of the Alarm Report memory becoming full.

The AUDIO PAUSE button is displayed in the High and Medium Priority Alarm screens. When the AUDIO PAUSE button is selected, the audible alarm tone will be silenced for 30 seconds.

3.1 High Priority Alarms

High priority alarms halt fluid delivery and require acknowledgement by the operator. High priority alarms are announced in a red message window with a flashing yellow border and a repeating audible tone. The alarm number is displayed along with the message.

When a high priority alarm is displayed, the display outside the message window is dimmed and the flow knob and all buttons outside the high priority message window become inactive until CONFIRM button is pressed.

The operator has the option to pause the audible alarm tone for 30 seconds. The operator has to acknowledge the alarm by selecting an option in the alarm message window.

Figure 6: Home Screen with High Priority Alarm

The sound pressure level for the High Priority acoustic alarm tones can be adjusted using the Audio Level Menu setting according to the table below

	Audio Level = 1	Audio Level = 5
High Priority Alarms	44 - 48 dB(A)	52 - 56 dB(A)

3.2 Medium Priority Alarms

Medium priority alarms require acknowledgement by the operator without halting fluid delivery. Medium priority alarms are announced in a yellow message window and a repeating audible tone. The alarm number is displayed along with the message. When a medium priority alarm is displayed, the flow knob and all buttons remain active. The operator has the option to pause the audible alarm tone for 30 seconds. The operator may acknowledge the alarm by selecting an option in the error message window.

Figure 7: Home Screen with Medium Priority Alarm

The sound pressure level for the Medium Priority acoustic alarm tones can be adjusted using the Audio Level Menu setting according to the table below

	Audio Level = 1	Audio Level = 5
Medium Priority Alarms	43 - 47 dB(A)	50 - 54 dB(A)

3.3 Informational Tones

Informational Tones are used to indicate conditions that do not require any user acknowledgement. They are announced by the non-repeating audible signal and sometimes visually by flashing a displayed value or symbol such as when pressure or flow limit values exceed the set limit, or the Ischemic timer has expired.

When adjusting the Audio level for the acoustic alarm tones. Be aware that sound pressure levels less than ambient levels can impede the recognition of alarm tones.

The Audio level setting must be adjusted individually according to the expected ambient noise level to ensure proper perception of audible alarms.

This page intentionally blank

4 Troubleshooting

This section provides a quick reference for responding to alarm conditions and error messages, and any subsequent troubleshooting that may be helpful to remedy certain situations.

4.1 General Troubleshooting

Each MPS 3 and MPS 3 ND System is rigorously tested prior to shipment to ensure the devices function reliably as intended. It is expected that over the life of the device some issues may arise as a result of use conditions, environment, handling, and storage. Annual Preventive Maintenance helps to ensure that the system will function properly during its use. Even so, this troubleshooting manual may be helpful in working through minor issues to get the system back to a proper functional status.

Only Quest Medical Service personnel or trained technicians and operators should attempt to troubleshoot the MPS 3 or MPS 3 ND System. If this manual does not remedy the situation please call Quest Medical Technical Support at +1 (888) 510-7623.

DO NOT attempt to disassemble or dismantle the MPS 3 or MPS 3 ND System unless trained to do so. Doing so may void the product warranty.

4.2 MPS® 3 Blood Bypass Tubing

The MPS 3 Blood Bypass Tubing (REF 5301016) is only for use as a back-up with the MPS 3 and MPS 3 ND Systems to continue fluid delivery in the event of complete battery depletion after AC Power failure or if the system becomes unusable even after following the corrective action and troubleshooting suggestions in Sections 4.3 and 4.4 of this manual. Follow the instruction for install and use in the accompanying IFU with each MPS 3 Bypass Tubing set.

Installing the Blood Bypass Tubing (5301016)

1. Using sterile technique, remove the Blood Bypass Tubing from the sterile pouch.
2. Ensure the clamp on the Blood Bypass Tubing is closed prior to installation.
3. Stop flow and ensure both delivery valves are closed.
4. Clamp both Blood & Crystalloid lines leading to the pumping cassette above the large bore Luer connectors.
5. Vent heat exchanger by manually depressing the vent valve to reduce the system pressure to zero.
6. Disconnect and cap blood source line from disposable cassette using female cap on Blood Bypass Tubing.
7. Attach Blood Bypass Tubing large bore Luer connector to the auxiliary Luer port of the 16-convolution heat exchanger.
8. Unclamp Blood Bypass Tubing and blood source line.
9. Manually depress vent valve to prime Blood Bypass Tubing and heat exchanger of air.
10. Manually depress vent valve to prime Blood Bypass Tubing and heat exchanger of air.
11. Once primed, clamp Blood Bypass Tubing and release vent valve.
12. As protocols require, unclamp Blood Bypass Tubing and initiate flow by manually depressing delivery valve.
13. If controller is unresponsive, monitor pressure from Arterial Pressure Monitor.
14. Monitor heat exchanger and delivery line for air bubbles and vent heat exchanger as needed.

REF 5301016 MPS® 3 Blood Bypass Tubing

Description

The MPS® 3 Blood Bypass Tubing contains the following component:

1. MPS® 3 Blood Bypass Tubing

Indication For Use

The MPS 3 Blood Bypass Tubing is only for use as a back-up with the Quest MPS 3 Console to continue fluid delivery in the event of complete battery depletion or if the MPS 3 Console becomes unusable. The Blood Bypass Tubing, when used in conjunction with the MPS Console and Delivery Set, is intended for use by perfusionists and surgeons trained in the delivery of cardioplegia solutions to the myocardium during open heart surgery. This is a sterile single use product.

Contraindication

This device is designed for use with only the Quest MPS 3 Console. Use with other systems is contraindicated. This device is not designed, sold or intended for use except as indicated.

Warnings and Cautions

1. Read and understand the information in these instructions prior to operating the MPS 3 Console. See MPS 3 Operations Manual for a complete listing of Warnings and Cautions and Storage Conditions. The attending clinician is solely responsible for the setup and use of the MPS 3 Console, Delivery Set, and Blood Bypass Tubing.
2. Observe all additional warnings and cautions contained in this Instruction for Use.
3. Examine sterile package carefully before opening to confirm package integrity and verify that the expiration date has not passed. The device is supplied in a sterile, single use package and is non-pyrogenic. DO NOT USE Blood Bypass Tubing with damaged packaging or if the expiration date has passed. DO NOT resterilize or reprocess.
4. Observe aseptic technique with all tubing connections. Do not overtighten rigid connections.
5. The main door must be closed to operate the MPS 3 Console with the Blood Bypass Tubing.
6. Dispose of this device according to hospital procedure for contaminated material.

Installing the Blood Bypass Tubing

1. Using sterile technique, remove the Blood Bypass Tubing from the sterile pouch.
2. Ensure the clamp on the Blood Bypass Tubing is closed prior to installation.
3. Stop flow and ensure both delivery valves are closed.
4. Clamp both Blood and Crystalloid inlet lines leading to main pumping cassette above the large bore luer connectors.
5. Vent heat exchanger by manually depressing the vent valve to reduce the system pressure to zero.
6. Disconnect and cap blood source line from disposable cassette using female cap on Blood Bypass Tubing.
7. Attach Blood Bypass Tubing large bore luer connector to blood source line.
8. Connect Blood Bypass Tubing standard male luer connector to the auxiliary luer port of 16 convolution heat exchanger or disconnect additive check valve and connect Blood Bypass Tubing onto left port of 10 convolution heat exchanger.
9. Unclamp Blood Bypass Tubing and blood source line.
10. Manually depress vent valve to prime Blood Bypass Tubing and heat exchanger of air.
11. Once primed, clamp Blood Bypass Tubing and release vent valve
12. As protocols requires, unclamp Blood Bypass Tubing and then initiate flow by manually depressing delivery valve.
13. If Controller is unresponsive, monitor pressure from Arterial Monitor.
14. Monitor heat exchanger and delivery line for air bubbles and vent heat exchanger as needed.

Arrest Agent and Additive Delivery with 16 Convolution Heat Exchanger

1. Ensure delivery valves are closed and Blood Bypass Tubing is clamped.
2. Manually vent heat exchanger to reduce the system pressure to zero.
3. Connect syringes to arrest agent and additive stopcocks.
4. Place arrest agent and additive stopcocks in the refill position and evacuate cartridge content.
5. Turn and break arrest agent and additive stopcocks towards cartridges.
6. As protocol requires, inject arrest agent and/or additive cartridge content into drug delivery lines.
7. Unclamp Blood Bypass Tubing and initiate flow with drug bolus by pressing down on delivery valve.

Arrest Agent and Additive Delivery with 10 Convolution Heat Exchanger

1. Ensure delivery valves are closed and Blood Bypass Tubing is clamped.
2. Manually vent heat exchanger to reduce the system pressure to zero.
3. Connect syringes to arrest agent and additive stopcocks.
4. Place arrest agent and additive stopcocks in the refill position and evacuate cartridge content.
5. Turn and break arrest agent stopcock towards cartridge.
6. Disconnect and connect arrest agent or additive syringe to yellow arrest stopcock as protocol requires.
7. Inject arrest agent or additive cartridge content into drug delivery line as protocol requires.
8. Unclamp Blood Bypass Tubing and initiate flow and drug bolus by pressing down on delivery valve.

Operating Precautions

1. The MPS 3 Delivery Set should not be used if there is any visible damage.
2. User should first clamp both inlet lines before disconnecting from pump cassette.
3. User is responsible for pressure monitoring as indicated by hospital protocol.
4. User is responsible for delivering proper arrest agent and additive concentrations by hospital protocol.
5. User is responsible for purging air from the system as indicated by hospital protocol.

4.3 Alarm Code List and Solutions

The following table lists alarm (error) codes, the displayed message, and recommended corrective actions. The alarm code is displayed in the message window. A chronological listing of all alarm codes on the device can be access by selecting the Error Report button form the Menu screen.

Alarm Code Priority	Message Display	Corrective Action
1 High	System Error SHUTDOWN RESTART	* Restart System * Call service after multiple occurrences
2 High	System Data Error SHUTDOWN RESTART	* Restart System * Call service after multiple occurrences
3, 4 High	System Error SHUTDOWN RESTART	* Restart System * Call service after multiple occurrences
5 Medium	Door is open Close the door to continue SHUTDOWN	* Close the door * Press shutdown to turn System off
6 High	Door is open Close door to continue	* Close the door
7 High	Door Open still detected Press IGNORE only if faulty sensor IGNORE RETEST	* Open and Close door * Press IGNORE if operator feels door is securely closed but the console is not recognizing that * Contact service following procedure
8 High	Door Open detected Open then Close door	* Open and Close the door * Contact service following procedure

Alarm Code Priority	Message Display	Corrective Action
9 High	Door Open detected Close door and press RETEST (Press IGNORE only if faulty sensor) IGNORE RETEST	* Open and Close the door * Press IGNORE if operator feels door is securely even when alarm is repeating itself * Contact service immediately
10, 11 High	System Config mismatch Error Call Service SHUTDOWN RESTART	* Restart System * Call service after multiple occurrences
12 High	Left Pump failed diagnostics RESTART CONFIRM	* Restart System * Call service after multiple occurrences
13 High	Right pump failed diagnostics RESTART CONFIRM	* Restart System * Call service after multiple occurrences
14 High	Left pump failed diagnostics RESTART CONFIRM	* Restart System * Call service after multiple occurrences
15 High	Right pump failed diagnostics RESTART CONFIRM	* Restart System * Call service after multiple occurrences
16 High	Pneumatic leak or compressor malfunction Consider attaching medical air if available Consult Service after this case SHUTDOWN RESTART	* Connect medical air * Contact service following procedure
17 High	Mechanism Valve failed diagnostics RESTART CONFIRM	* Open door and manually depress mechanism valves several times * Restart System * Call service after multiple occurrences

Alarm Code Priority	Message Display	Corrective Action
18 High	Delivery Valve failed diagnostics RESTART CONFIRM	* Manually actuate delivery and vent valves several times * Clean valves if dirty * Restart System * Call service after multiple occurrences
19 High	H2O Circ valve error detected Proceed with potential heating issues RESTART CONFIRM	* Restart System * Call service after multiple alarms
20 High	Pressure sensor zeroing failure Check Vent line for clamps SHUTDOWN RESTART	* Check line for clamps, kinks or occlusions * Restart System * Call service after multiple occurrences
21 High	Pressure sensor zeroing failure Check Vent line for clamps SHUTDOWN RESTART	* Check line for clamps, kinks or occlusions * Restart System * Call service after multiple occurrences
22 High	Left Pump failed diagnostics RESTART CONFIRM	* Restart System * Call service after multiple occurrences
23 High	Right Pump failed diagnostics RESTART CONFIRM	* Restart System * Call service after multiple occurrences
24 High	Mechanism Valve failed diagnostics RESTART CONFIRM	* Open door and manually depress mechanism valves several times * Restart System * Call service after multiple occurrences
25 High	Delivery Valve failed diagnostics RESTART CONFIRM	* Manually actuate valves several times * Clean valves if dirty * Restart System * Call service after multiple occurrences

Alarm Code Priority	Message Display	Corrective Action
26, 27 High	System Error SHUTDOWN RESTART	* Restart System * Call service after multiple occurrences
28, 29 High	System Config mismatch Error Call Service SHUTDOWN RESTART	* Restart System * Call service after multiple occurrences
30 High	Fluid Level Sensor test failure Manually Vent bubble trap Proceed with Caution RESTART CONFIRM	* Continue with case while manually venting air accumulations in bubble trap * Contact service following procedure
31 High	Air-In-Line Sensor test failure Air detection may be compromised Proceed with caution RESTART CONFIRM	* Continue with case while manually monitoring for air in delivery line * Contact service immediately following procedure
32 Medium	Is there fluid in the bubble trap? RETEST YES	* If fluid is present, select YES OR * If fluid is not present, restart and repeat the priming process & contact service after multiple occurrences
33 Medium	Is there fluid in the delivery line? RETEST YES	* If fluid is present, select YES OR * If fluid is not present, restart and repeat the priming process & contact service after multiple occurrences

Alarm Code Priority	Message Display	Corrective Action
34 High	Air in bubble trap after Prime Check source fluid and circuit RETEST	* If there is NOT air present in heat exchanger, check heat exchanger to ensure it is secured tightly with the locking knob & Reprime the circuit OR * If there is air present in heat exchanger, check the lines for clamps and ensure there is adequate blood source pressure & Reprime the circuit
35 High	Delivery Set pressure test error Check circuit and Delivery/Vent valves RETEST	* Check heat exchanger to ensure it is secured tightly with the locking knob * Manually actuate the delivery and vent valves & Reprime the circuit * Check lines for clamps, kinks and occlusions
36 High	Heat Exchanger pressure test failed Replace delivery set REPRIME	* Check heat exchanger to ensure it is tightly secured with the locking knob * If using a heater/cooler unit, turn off heater/cooler unit and repeat the prime sequence * Replace disposable set after multiple occurrences
37 High	Unable to Prime due to inadequate fill Check fluid source pressure and circuit RETEST	* Check the lines for clamps, ensure there is adequate blood source pressure & Reprime the circuit
38 High	Unable to Prime Check fluid source pressure and circuit RETEST	* Check the lines for clamps, ensure there is adequate blood source pressure & Reprime the circuit

Alarm Code Priority	Message Display	Corrective Action
39 High	System pressure sensor error RETEST	* Check the lines for clamps, kinks or occlusions * Manually actuate delivery and vent valves several times * Check heat exchanger to ensure it is securely * Restart System * Contact service after multiple occurrences
40 High	External Antegrade sensor not detected USE SYSTEM RETEST	* Select USE SYSTEM OR * Retest and if multiple failures are observed, disconnect the cable and try again * Contact service after multiple occurrences
41 High	External Retrograde sensor not detected USE SYSTEM RETEST	* Select USE SYSTEM OR * Retest and if multiple failures are observed, disconnect the cable and try again * Contact service after multiple occurrences
42 High	Max System pressure Check circuit CONFIRM	* Check the lines for clamps, kinks or occlusions * Manually actuate delivery and vent valves several times * Check heat exchanger to ensure it is tightly secured with the locking knob * Restart System * Contact service after multiple occurrences

Alarm Code Priority	Message Display	Corrective Action
43 High	Max external Antegrade pressure Check circuit CONFIRM	* Check the lines for clamps, kinks or occlusions * Check the stopcock position at the sensor * Try to reestablish zero by re-zeroing sensor * If it is believed sensor is faulty, replace sensor and try again * Contact service after multiple occurrences
44 High	Max external Retrograde pressure Check circuit CONFIRM	* Check the lines for clamps, kinks or occlusions * Check the stopcock position at the sensor * Try to reestablish zero by re-zeroing sensor * If it is believed sensor is faulty, replace sensor and try again * Contact service after multiple occurrences
45 High	Excessive system pressure Check lines for clamps CONFIRM	* Check lines for clamps, kinks or occlusions * Manually actuate delivery and vent valves several times * Check heat exchanger to ensure it is tightly secured with the locking knob * Restart System * Contact service after multiple occurrences
46 High	Excessive Blood source pressure Check Blood source CONFIRM	* Check the source line pressure * Restart and resume case, if problem persists * Contact service after multiple occurrences
47 High	Excessive Cryst source pressure Check Cryst source CONFIRM	* Check the crystalloid line pressure * Restart and resume case, if the problem persists * Contact service after multiple occurrences

Alarm Code Priority	Message Display	Corrective Action
48, 49 High	Excessive chamber pressure CONFIRM	* Continue as normal OR * Restart and resume case * Call service after multiple occurrences
50 Medium	Low delivery line pressure Check delivery line connections Check Vent pump CONFIRM	* Check heat exchanger to ensure it is properly secured with locking knob * Check location of delivery line and catheter * Check external pressure sensor * Re-zero external pressure sensor
51 High	Antegrade delivery valve sensor mismatch Flow may be resumed CONFIRM	* Manually actuate valve several times * Clean valves if dirty
52 High	Retrograde delivery valve sensor mismatch Flow may be resumed CONFIRM	* Manually actuate valve several times * Clean valves if dirty
53 High	Vent valve sensor mismatch Flow may be resumed CONFIRM	* Manually actuate valve several times * Clean valves if dirty
54 High	Air detected in delivery line IGNORE CONFIRM When IGNORE is selected: Next Air detection will not stop flow Select Confirm only if you agree CONFIRM CANCEL	* Check delivery line to ensure it is fully inserted in sensor * If sensor is ignored, manually inspect delivery line for air moving forward

Alarm Code Priority	Message Display	Corrective Action
55 Medium	Air detected in delivery line. Flow continues Manually check for air CONFIRM	* Check delivery line to ensure it is fully inserted in sensor * If sensor is ignored, manually inspect delivery line for air moving forward
56 Medium	More Air detected in delivery line. Continue to Flush CONFIRM	* Check delivery line to ensure it is fully inserted in sensor * If sensor is ignored, manually inspect delivery line for air moving forward
57 Medium	Vent Valve is Open Check for Air in the bubble trap Ensure the heat exchanger is locked CONFIRM	* Check heat exchanger to ensure it is tightly secured with the locking knob * Check vent line for clamps, kinks, or occlusions * Attempt to manually actuate valve several times * Restart System * Contact service after multiple occurrences
58 Medium	Low pressure in heat exchanger Check circuit CONFIRM	* Check heat exchanger to ensure it is tightly secured with the locking knob * Check vent and delivery lines to ensure they are properly inserted in delivery and vent valves
59 High	Delivery occlusion Check for clamps Check pressure limit setting CONFIRM	* Check delivery line for clamps, kinks, or occlusions * Check the upper pressure limit settings
60 High	System Error SHUTDOWN RESTART	* Restart System * Call service after multiple occurrences
61, 62 Medium	Inadequate Crystalloid fill Check Source CONFIRM	* Check Crystalloid inlet line for clamps, kinks, or occlusions * Raise the Crystalloid bag or use a pressure cuff

Alarm Code Priority	Message Display	Corrective Action
63, 64 Medium	Inadequate Blood fill Check Source CONFIRM	* Check Blood inlet line for clamps, kinks, or occlusions * Increase the blood inlet source pressure
65 Medium	Inadequate Fill Check Source CONFIRM	* Check blood/crystalloid source lines and pressures * If problem persists, restart system * Call service after multiple occurrences
66, 67 High	System Error SHUTDOWN RESTART	* Restart System * Call service after multiple occurrences
68, 69 High	System FPGA Error SHUTDOWN RESTART	* Restart System * Call service after multiple occurrences
70 High	System Error SHUTDOWN RESTART	* Restart System * Call service after multiple occurrences
71, 72 High	System FPGA Error SHUTDOWN RESTART	* Restart System * Call service after multiple occurrences
73 High	System Mechanism Error SHUTDOWN RESTART	* Restart System * Call service after multiple occurrences
74 High	Door is open Close door to continue SHUTDOWN	* Close the door * Press shutdown to turn System off
75, 76 High	System FPGA Error SHUTDOWN RESTART	* Restart System * Call service after multiple occurrences
78, 79, 84, 85 High	System Error SHUTDOWN RESTART	* Restart System * Call service after multiple occurrences

Alarm Code Priority	Message Display	Corrective Action
86, 87, 88, 89 High	Blood Pump Error Flow may be resumed SHUTDOWN CONFIRM	* Continue with procedure * If error occurs multiple times over the course of the procedure, contact service immediately following procedure
92, 93 High	Unable to maintain flow rate setting Check circuit CONFIRM	* Check blood/crystalloid source lines and pressures * Stop flow and restart flow * If problem persists, restart system * Call service after multiple occurrences
94 High	Mechanism valve error Reinitializing. Please wait…	* Continue with procedure * If error occurs multiple times over the course of the procedure, contact service immediately following procedure
95 High	Delivery valve sensor mismatch Flow may be resumed CONFIRM	* Continue with procedure * If error occurs multiple times over the course of the procedure, contact service immediately following procedure
96, 97, 98 High	Arrest pump failed diagnostics Proceed without Arrest pump RESTART CONFIRM	* Restart System * Call service after multiple occurrences
99 Medium	Arrest cartridge is empty or absent Fill Arrest cartridge, press RETEST DISABLE RETEST	* Choose DISABLE if Arrest delivery is no longer needed for procedure OR * Refill Arrest Cartridge and select RETEST

Alarm Code Priority	Message Display	Corrective Action
101 Medium	Arrest occlusion during prime Check Arrest line and stopcock CONFIRM RETEST	* Check arrest delivery line for clamps, kinks, or occlusions * Check stopcock position * If problem persists, replace arrest delivery line and try again * If problem still exists after replacing arrest delivery line, restart system and try again * Contact service after multiple occurrences
102 Medium	Arrest cartridge is empty or absent Arrest pump is Off REFILL CONFIRM	* Choose CONFIRM if Arrest delivery is no longer needed for procedure OR * Select REFILL and refill Arrest Cartridge
103 Medium	Arrest occlusion detected Check Arrest line and stopcock Arrest pump is Off CONFIRM RETEST	* Check arrest delivery line for clamps, kinks, or occlusions * Check stopcock position * If problem persists, replace arrest delivery line and try again * If problem still exists after replacing arrest delivery line, restart system and try again * Contact service after multiple occurrences
104 Medium	Arrest cartridge is empty or absent Fill Arrest cartridge, press RETEST DISABLE RETEST	* Choose DISABLE if Arrest delivery is no longer needed for procedure OR * Refill Arrest cartridge and select RETEST
105 Medium	Additive cartridge is empty or absent Fill Additive cartridge, press RETEST DISABLE RETEST	* Choose DISABLE if Additive delivery is no longer needed for procedure OR * Refill Additive Cartridge and select RETEST

Alarm Code Priority	Message Display	Corrective Action
106, 107, 108 High	Additive pump failed diagnostics Proceed without Additive pump RESTART CONFIRM	* Restart System * Call service after multiple occurrences
109 Medium	Additive cartridge is empty or absent Fill Additive cartridge, press RETEST DISABLE RETEST	* Choose DISABLE if Additive delivery is no longer needed for procedure OR * Refill Additive Cartridge and select RETEST
111 Medium	Additive occlusion during prime Check Additive line and stopcock CONFIRM RETEST	* Check additive delivery line for clamps, kinks, or occlusions * Check stopcock position * If problem persists, replace arrest delivery line and try again * If problem still exists after replacing additive delivery line, restart system and try again * Contact service after multiple occurrences
112 Medium	Additive cartridge is empty or absent Additive pump is Off REFILL CONFIRM	* Choose CONFIRM if Additive delivery is no longer needed for procedure OR * Select REFILL and refill Additive Cartridge
113 Medium	Additive occlusion detected Check Additive line and stopcock Additive pump is Off CONFIRM RETEST	* Check additive delivery line for clamps, kinks, or occlusions * Check stopcock position * If problem persists, replace arrest delivery line and try again * If problem still exists after replacing additive delivery line, restart system and try again * Contact service after multiple occurrences

Alarm Code Priority	Message Display	Corrective Action
114 Medium	Arrest cartridge is empty or absent Arrest pump is Off REFILL CONFIRM	* Choose CONFIRM if Arrest delivery is no longer needed for procedure OR * Select REFILL and refill Arrest Cartridge
115 Medium	Additive cartridge is empty or absent Fill Additive cartridge, press RETEST DISABLE RETEST	* Choose DISABLE if Additive delivery is no longer needed for procedure OR * Refill Additive Cartridge and select RETEST
117 Medium	Arrest pump error Arrest pump is Off CONFIRM RETEST	* Select COFIRM to turn Arrest pump off and continue procedure OR * Select RETEST to turn Arrest pump on and continue procedure
118 Medium	Arrest pump failed Proceed without Arrest pump CONFIRM	* Restart System and resume case * Contact service after multiple occurrences
119 Medium	Additive pump error Additive pump is Off CONFIRM RETEST	* Select COFIRM to turn Additive pump off and continue procedure OR * Select RETEST to turn Additive pump on and continue procedure
120 Medium	Additive pump failed Proceed without Additive pump CONFIRM	* Restart System and resume case * Contact service after multiple occurrences

Alarm Code Priority	Message Display	Corrective Action
121 Medium	Arrest pump is Disabled CONFIRM	* Prime arrest pump
122 Medium	Additive pump is Disabled CONFIRM	* Prime additive pump
12332 Medium	Circulation valve sensor mismatch Manually monitor delivery temperature H2O Circ is Off. Heaters are disabled. CONFIRM	* Continue procedure without ability to control temperature using the console * Try connecting medical air * Restart System * Contact service after multiple occurrences
12432 Medium	H2O temperature sensor error H2O temperature will not be displayed Heaters Disabled CONFIRM	* Continue without temperature control OR * Restart and resume case * Call service after multiple occurrences
125 Medium	Deliver temperature sensor error Deliver temperature will not be displayed Call Service after this Case CONFIRM	* Manually monitor delivery temperature * Restart and resume case * Call service after multiple occurrences
12632 Medium	Temperature exceeded allowed limit Ensure that cold water is available H2O Circ turned OFF CONFIRM	* Check cold water source temperature * Ensure cold water source has adequate water level and flow rate * Check blood inlet temperature
127, 128 Medium	Water flow sensor failed Continue with heaters disabled Start a NEW CASE to retest CONFIRM	* Continue without temperature control OR * Restart and resume case * Call service after multiple occurrences

Alarm Code Priority	Message Display	Corrective Action
129 Medium	Low water flow detected Check for air locks. Check external heater/cooler Temperature Control may be affected CONFIRM	* Ensure the H2O Circulation System has been fully primed using he steps outlined in the Operations Manual * Ensure cold water source has adequate water level and flow rate * Check water lines to ensure they are connected properly and not reversed * Increase head height of Hypothermic Reservoir * Increase water pressure and flow mode settings in heater/cooler unit, if possible * If a bypass loop is being used in conjunction with the heater/cooler unit, than partially clamping/reducing the tubing size or installing pressure relief check valve will increase flow into the H2O Circulation System * Try to prime/re-prime circulation system * If system will still not prime properly, remove heat exchanger and manually burp top puck seal to remove air and then try to prime/re-prime system

Alarm Code Priority	Message Display	Corrective Action
130 Medium	Reverse water flow detected Check water connections H2O Circ is Off. Turn Circ On to retest CONFIRM	* Ensure the H2O Circulation System has been fully primed using he steps outlined in the Operations Manual * Ensure cold water source has adequate water level and flow rate * Check water lines for clamps, kinks, or occlusions * Check water lines to ensure they are connected properly and not reversed * Increase head height of Hypothermic Reservoir * Increase water pressure and flow mode settings in heater/cooler unit, if possible * If a bypass loop is being used in conjunction with the heater/cooler unit, than partially clamping/reducing the tubing size or installing pressure relief check valve will increase flow into the H2O Circulation System * Try to prime/re-prime circulation system * If system will still not prime properly, remove heat exchanger and manually burp top puck seal to remove air and then try to prime/re-prime system
131 Medium	Low pressure in heat exchanger Check circuit CONFIRM	* Ensure adequate flow rate is set during Recirc and/or Vent modes * Check head height of cardiotomy reservoir to ensure it is not too far below vent valve

Alarm Code Priority	Message Display	Corrective Action
134, 135, 136 Medium	Heater diagnostics failed Continue with heaters disabled Start a NEW CASE to retest heaters CONFIRM	* Continue if heating is not required for procedure * Ensure the H2O Circulation System has been fully primed using the steps outlined in the Operations manual * Restart and select New Case to retest heater diagnostics * Contact service after multiple occurrences.
137 Medium	Heater diagnostics started May take up to 100 seconds CONFIRM	* Wait for heater diagnostics to complete
138 High	Pneumatic pressure sensor error Service required SHUTDOWN RESTART	* Restart System * Call service after multiple occurrences
139 Medium	Low Pneumatic pressure detected CONFIRM	* Connect to medical air * Call service following procedure
140 High	Blood/Cryst pump has been stopped Pneumatic pressure critical Check compressor or connect medical air CONFIRM	* Connect to medical air * Call service following procedure
141 High	Pneumatic overpressure (> 55 psi) Check medical air source SHUTDOWN RETRY	* Disconnect from medical air and retry
142 Medium	Pneumatic leak or internal compressor malfunction Consider attaching medical air if available Consult service after this case CONFIRM	* Connect to medical air * Call service following procedure

Alarm Code Priority	Message Display	Corrective Action
143, 144 Medium	Compressor malfunction detected Consult service after this case CONFIRM	* Connect to medical air * Call service following procedure
145 High	Pneumatic system failure Connect medical air Service required SHUTDOWN CONFIRM	* Connect to medical air * Call service following procedure
146 High	System Communication Error Manual Restart Required	* Manually Restart System * Call service after multiple occurrences
147 High	System Error SHUTDOWN RESTART	* Restart System * Call service after multiple occurrences
148 High	System Communication Error Manual Restart Required	* Manually Restart System * Call service after multiple occurrences
149 Medium	Temperature sensor Fail Call Service after this Case CONFIRM	* Safe to use. Board temperature sensor is not essential for operation * Call service after multiple occurrences
151 Medium	H2O temperature sensor error H2O temperature will not be displayed Heaters Disabled CONFIRM	* Continue without temperature control OR * Restart and resume case * Call service after multiple occurrences
152 High	Pneumatic pressure sensor error Service required SHUTDOWN RESTART	* Restart System * Call service after multiple occurrences

Alarm Code Priority	Message Display	Corrective Action
153 Medium	Heater controls failed Continue with heaters disabled Start a NEW CASE to retest CONFIRM	* Continue without temperature control OR * Restart and start New Case * Call service after multiple occurrences
155 Medium	Drug pump LED fail Contact Service after this Case CONFIRM	* Safe to use. Drug pump is fully functional. Only the LED may be compromised. * Call service after multiple occurrences
157, 158 Medium	Board Temperature sensor Fail Call Service after this Case CONFIRM	* Safe to use. Board temperature sensor is not essential for operation. * Call service after multiple occurrences
160 Medium	Elevated internal temperature detected Check for obstructed air flow Maintenance required CONFIRM	* Check fans and air inlets for obstructions * Restart System * Contact service after multiple occurrences
161 High	Internal temperature Error detected Check for obstructed air flow Unable to proceed. Call for Service SHUTDOWN	* Check fans and air inlets for obstructions * Restart System * Contact service after multiple occurrences
162, 163 High	System Communication Error Manual Restart Required	* Manually Restart System * Call service after multiple occurrences
165 Medium	Elevated internal temperature detected Check for obstructed air flow Maintenance required CONFIRM	* Check fans and air inlets for obstructions * Restart System * Contact service after multiple occurrences

Alarm Code Priority	Message Display	Corrective Action
166 High	Internal temperature Error detected Check for obstructed air flow Unable to proceed. Call for Service SHUTDOWN	* Check fans and air inlets for obstructions * Restart System * Contact service after multiple occurrences
167 Medium	Elevated internal temperature detected Check for obstructed air flow Maintenance required CONFIRM	* Check fans and air inlets for obstructions * Restart System * Contact service after multiple occurrences
168 High	Internal temperature Error detected Check for obstructed air flow Unable to proceed. Call for Service SHUTDOWN	* Check fans and air inlets for obstructions * Restart System * Contact service after multiple occurrences
169 Medium	Elevated internal temperature detected Check for obstructed air flow Maintenance required CONFIRM	* Check fans and air inlets for obstructions * Restart System * Contact service after multiple occurrences
170 High	Internal temperature Error detected Check for obstructed air flow Unable to proceed. Call for Service SHUTDOWN	* Check fans and air inlets for obstructions * Restart System * Contact service after multiple occurrences
171, 172 High	Power Supply Voltage Error SHUTDOWN RESTART	* Restart System * Contact service after multiple occurrences
173 Medium	Power loss detected. Running on battery Heaters disabled. Reconnect power when available CONFIRM	* If power loss did not occur, check power cord, outlet or circuit breaker * Contact service after multiple occurrences
174 Medium	AC power detected Previous functionality restored CONFIRM	* No action required

Alarm Code Priority	Message Display	Corrective Action
175 Medium	Battery capacity at 75% Reconnect power when available CONFIRM	* Reconnect AC power. If power loss did not occur, check power cord, outlet or circuit breaker
176 Medium	Battery capacity at 50% LCD has been dimmed to conserve power CONFIRM	* Reconnect AC power. If power loss did not occur, check power cord, outlet or circuit breaker
177 Medium	Battery capacity at 25% Reconnect power immediately CONFIRM	* Reconnect AC power. If power loss did not occur, check power cord, outlet or circuit breaker
178 High	Battery critically low Shutting down …	* Reconnect AC power. If power loss did not occur, check power cord, outlet or circuit breaker
179 High	Battery temperature elevated Turn off switch on the rear panel Unable to proceed. Call for service	* Check fans and air inlets for obstructions * Restart System * Contact service after multiple occurrences
180, 181 Medium	Battery Charge Error Battery backup unavailable Consult service after this case CONFIRM	* Call service after multiple occurrences
182, 183 Medium	Battery Charge Error Consult service after this case CONFIRM	* Call service after multiple occurrences
184 High	Air detected in delivery Line IGNORE CONFIRM	* Check delivery line to ensure it is fully inserted in sensor * If sensor is ignored, manually inspect delivery line for air moving forward

Alarm Code Priority	Message Display	Corrective Action
185 Medium	Air detected in delivery line. Flow continues Manually check for air CONFIRM	* Check delivery line to ensure it is fully inserted in sensor * If sensor is ignored, manually inspect delivery line for air moving forward
186 High	System Error SHUTDOWN RESTART	* Restart System * Call service after multiple occurrences
187 High	Max System pressure Check circuit CONFIRM	* Check the lines for clamps, kinks, or occlusions * Manually actuate delivery and vent valves several times * Check heat exchanger to ensure it is tightly secured with the locking knob * Restart System * Contact service after multiple occurrences
188 High	Max external Antegrade pressure Check circuit CONFIRM	* Check the lines for clamps, kinks, or occlusions * Check the stopcock position at the sensor * Attempt to re-zero the sensor * If it is believed sensor is fault, replace sensor and try again * Contact service after multiple occurrences
189 High	Max external Retrograde pressure Check circuit CONFIRM	* Check the lines for clamps, kinks, or occlusions * Check the stopcock position at the sensor * Attempt to re-zero the sensor * If it is believed sensor is fault, replace sensor and try again * Contact service after multiple occurrences

Alarm Code Priority	Message Display	Corrective Action
190 High	Unable to maintain flow rate setting Check circuit CONFIRM	* Check blood/crystalloid source lines and pressures * Stop flow and restart flow * If problem persists, restart system * Call service after multiple occurrences
191 Medium	Arrest pump Home Sensor fail Arrest pump is disabled CONFIRM RETEST	* Select RETEST * If error still persists, restart system and try again * Contact service after multiple occurrences
192 Medium	Additive pump Home Sensor fail Additive pump is disabled CONFIRM RETEST	* Select RETEST * If error still persists, restart system and try again * Contact service after multiple occurrences
197 High	Arrest pump piston sensor error Verify Arrest cartridge installation DISABLE	* Select DISABLE to complete Prime * Check Arrest Cartridge to verify it is properly installed. * Retry drug Prime from the Home screen. * If error still persists, contact Service
198 Medium	Arrest over-delivery detected Arrest has been turned off CONFIRM OFF TURN ON	* Select CONFIRM OFF to leave Arrest pump off and continue procedure OR * Select TURN ON to turn Arrest pump back on and continue procedure
199 Medium	Arrest under-delivery detected Check cartridge and circuit CONFIRM RETEST	* Select CONFIRM to suspend monitoring until next dose OR * Select RETEST to continue monitoring

Alarm Code Priority	Message Display	Corrective Action
201 High	Additive pump piston sensor error Verify Additive cartridge installation DISABLE	*Select DISABLE to complete Prime * Check Additive Cartridge to verify it is properly installed. * Retry drug Prime from the Home screen. * If error still persists, contact Service
202 Medium	Additive over-delivery detected Additive has been turned off CONFIRM OFF TURN ON	* Select CONFIRM OFF to leave Additive pump off and continue procedure OR * Select TURN ON to turn Additive pump back on and continue procedure
203 Medium	Additive under-delivery detected Check cartridge and circuit CONFIRM RETEST	* Select CONFIRM to suspend monitoring until next dose OR * Select RETEST to continue monitoring
204 Medium	Internal H2O temperature sensor error Ensure proper Cold water source Call Service after this Case CONFIRM	* Continue as normal OR * Restart and resume case * Call service after multiple occurrences
205 High	Temperature exceeded allowed limit Ensure that cold water is available H2O Circ turned Off CONFIRM	* Check cold water source temperature * Ensure cold water source has adequate water level and flow rate * Check blood inlet temperature

Alarm Code Priority	Message Display	Corrective Action
207 High	Unsafe temperature detected Disconnect main power. Call for Service SHUTDOWN	* Check fans and air inlets for obstructions * Restart System * Contact service after multiple alarm errors
208 High	System Error SHUTDOWN RESTART	* Restart System * Contact service after multiple occurrences
209, 210, 211, 212, 213, 214, 215, 216, 217, 218, 219, 220 Medium	Data Logging Error Consult Service after this case CONFIRM	* Continue as normal * Contact service after multiple alarms
221, 222, 223 Medium	Data Log File Transfer CONFIRM	* Continue as normal * Contact service after multiple alarms
226 Medium	Internal H2O temperature sensor error Ensure proper Cold water source Call Service after this Case CONFIRM	* Continue as normal OR * Restart and resume case * Call service after multiple occurrences
228 Medium	Battery Error Consult service after this case CONFIRM	* Continue as normal OR * Restart and resume case * Call service after multiple occurrences
229, 230, 231, 232 Medium	Board Temperature sensor Fail Call Service after this Case CONFIRM	* Continue as normal. Board temperature sensor is not essential for operation. * Call service after multiple occurrences

Alarm Code Priority	Message Display	Corrective Action
233 Medium	Arrest Pump Plunger Seek Error Arrest pump is Off DISABLE RETEST	* Choose DISABLE if Arrest delivery is no longer needed for procedure OR * Reinstall Arrest cartridge and select RETEST
235 High	System Data Error SHUTDOWN RESTART	* Restart System * Call service after multiple alarms
236 High	Memory Access Failure SHUTDOWN RESTART	* Restart System * Call service after multiple alarms
237 High	Memory Access Failure CONFIRM	* Continue as normal OR * Restart and resume case * Call service after multiple occurrences
238 Medium	Secondary Comm channel Error CONFIRM	* Continue as normal OR * Restart and resume case * Call service after multiple occurrences
239 Medium	Additive Pump Plunger Seek Error Additive Pump is Off DISABLE RETEST	* Choose DISABLE if Additive delivery is no longer needed for procedure OR * Reinstall Additive cartridge and select RETEST
241 Medium 242 High	Temperature exceeded allowed limit Check Heater-Cooler CONFIRM	* Check Heater Cooler * Call service after multiple occurrences

Alarm Code Priority	Message Display	Corrective Action
243 High	Unsafe temperature detected Disconnect main power. Call for Service SHUTDOWN	* Check fans and air inlets for obstructions * Restart System * Contact service after the case
244 Medium	System Data Error Defaults Loaded CONFIRM	* System Settings and Protocols are loaded with default values * Select NEW CASE and verify all case data during setup
247 Medium	Arrest pump piston sensor error Verify Arrest cartridge installation Arrest pump is Off CONFIRM	* Check Arrest Cartridge to verify it is properly installed and fully secured then turn On the Arrest pump * If the cartridge was secure, try selecting Refill then Done again * If error still persists, restart system and try again * Contact service after multiple occurrences
248 Medium	Additive pump piston sensor error Verify Additive cartridge installation Additive pump is Off CONFIRM	* Check Additive Cartridge to verify it is properly installed and fully secured then turn On the Additive pump. * If the cartridge was secure, try selecting Refill then Done again * If error still persists, restart system and try again * Contact service after multiple occurrences
249 High	System FPGA Error SHUTDOWN RESTART	* Restart System * Call service after multiple occurrences
250 Medium	Power loss detected. Running on battery Reconnect power when available CONFIRM	* If power loss did not occur, check power cord, outlet, or circuit breaker * Contact service after multiple occurrences

Alarm Code Priority	Message Display	Corrective Action
270 High	System Error SHUTDOWN RESTART	* Restart System * Call service after multiple occurrences
271 High	System Communication Error Manual Restart required	* Manually restart system * Call service after multiple occurrences
272 High	System Data Error SHUTDOWN RESTART	* Restart system * Call service after multiple alarms
273 High	System Config mismatch Error Call Service SHUTDOWN RESTART	* Restart System * Call service after multiple occurrences
274 Medium	Startup Diagnostics failed RESTART CONTINUE	* Restart System * Call service after multiple occurrences
275 High	System Error SHUTDOWN RESTART	* Restart System * Call service after multiple occurrences
276 High	UI Internal Error Call Service after the case CONFIRM	* Continue as normal OR * Restart and resume case * Call service after multiple occurrences
277 High	Elevated internal UI temperature Check for obstructed air flow Maintenance required CONFIRM	* Ensure device has sufficient air flow to cool * Call service after multiple occurrences

Alarm Code Priority	Message Display	Corrective Action
278 High	Internal UI temperature Error Check for obstructed air flow Unable to proceed. Call for Service SHUTDOWN	* Restart and resume case * Call service after multiple occurrences
279 High	UI Voltage Critical SHUTDOWN RESTART	* Restart and resume case * Call service after multiple occurrences
280 Medium, 281, 282, 283 High	Internal ECG Error ECG cannot be displayed CONFIRM	* Continue as normal. Internal ECG is not essential to operation. * Call service after multiple occurrences
284 Medium	Copy to Media Failed CONFIRM	* Retry * Try another Flash memory device
285 High	User default Protocol Error Resetting to Factory Defaults CONFIRM	* Continue as normal. Check Protocols in Protocol Manager * Re-download Master File * Call service after multiple occurrences
286 High	Protocol error. Deleting all Protocols. Copy or re-create the protocols if needed CONFIRM	* Continue as normal. Check Protocols in Protocol Manager * Re-download Master File * Call service after multiple occurrences
287 Medium	File Access Failure CONFIRM	* Continue as normal. * Call service after multiple occurrences
288 High	System Data Error SHUTDOWN RESTART	* Restart System * Call service after multiple alarms

Alarm Code Priority	Message Display	Corrective Action
289 High	Memory Access Failure CONFIRM	* Continue as normal OR * Restart and resume case * Call service after multiple occurrences
290 Medium	File Access Failure CONFIRM	* Continue as normal. Check Protocols in Protocol Manager * Call service after multiple occurrences
291 Medium	Memory Access Failure CONFIRM	* Continue as normal OR * Restart and resume case * Call service after multiple occurrences
292 High	System Exception Error Manual Restart Required	* Manually Restart System * Call service after multiple occurrences
293 Medium	EEPROM Reset to Defaults. Please Restart SHUTDOWN RESTART	* Restart System * Call service after multiple alarms
295 Medium	System settings Data Error Settings Reset to Defaults CONFIRM	* Continue as normal * Check Settings in Menu
296 Medium	Case Data Error Reset to Defaults CONFIRM	* Continue as normal. Case Data is not essential to operation. * Call service after multiple occurrences
297 Medium	Delivered Volume Data Error Reset to Defaults CONFIRM	* Continue as normal. Check delivered volumes for accuracy * Call service after multiple occurrences

Alarm Code Priority	Message Display	Corrective Action
298 Medium	Master file Unavailable Please insert media with Master File CONFIRM	* Master file may be corrupt * Re-download Master File * Call service after multiple occurrences
299 Medium	Incompatible Master file detected Please insert media with compatible file CONFIRM	* Master file may be corrupt * Re-download Master File * Call service after multiple occurrences
300 Medium	Customized data corrupted All customized data needs review CONFIRM	* All Personnel, Additive, Crystalloid, and Component data should be reviewed
301 Medium	CaseLog Version Mismatch/Recovery Error CONFIRM	* Retry * Try another Flash memory device
302, 303 Medium	System maintenance due Please schedule System Maintenance CONFIRM	* Continue as normal * Contact service to schedule maintenance
304, 305 Medium	Audio module Error Check the screen for all Alarms/Notifications CONFIRM	* Audio tones may not be heard * Call service after multiple occurrences
306 Medium	Unable to set System Audio SHUTDOWN RESTART	* May not be able to adjust audio volume level * Call service after multiple occurrences
307 Medium	Low Arrest volume < 10 ml REFILL CONFIRM	* Refill Arrest
308 Medium	Low Additive volume < 10 ml REFILL CONFIRM	* Refill Additive

Alarm Code Priority	Message Display	Corrective Action
309 Medium	Crystalloid source volume low < 150 ml REPLACE CONFIRM	* Stop flow to replace Crystalloid bag and enter new volume
310 Medium	Crystalloid Source Volume low < 50 ml REPLACE CONFIRM	* Stop flow to replace Crystalloid bag and enter new volume
311 High	Flow set to zero Crystalloid Source Empty REPLACE CONFIRM	* Stop flow to replace Crystalloid bag and enter new volume
312 Medium	Flow range is limited in Low Vol mode Shift to NORMAL flow for full range NORMAL LOWVOL	* Select LOWVOL to remain in Low Volume mode and stay below 200 ml/min * Select NORMAL to exit LOWVOL mode and increase the flow range
313 High	EEPROM Version Change Detected. EEPROM Reset to Defaults CONFIRM	* Manually Restart System * Call service after multiple occurrences
314 High	Different Console-Controller pair detected Press SWAP if intended, else Press SHUTDOWN and reconnect original SWAP SHUTDOWN	* Select SWAP to continue OR * Select SHUTDOWN to power off system and re-connect original pair
315 High	Resume case allowed ONLY if Same Controller is present DIFF CNTLR SAME CNTLR	* Select DIFF CNTLR if Controller is swapped * Resume Case is disabled OR * Select SAME CNTLR if Console is swapped * Resume Case is enabled

4.4 Further Troubleshooting

This section describes how to troubleshoot issues that may not be found in the previous table. These tips and guidelines have been developed form user feedback and experiences.

4.4.1 Max Overpressure Alarms

- Check for any clamps accidentally left on the delivery tubing or kinks present in the delivery tubing at the console or at the table.
- Check for improper settings on the stopcocks and any other external devices.
- Check for upper pressure limit settings. Ensure that they are set to the proper levels.

4.4.2 Arrest & Additive Alarms

- If occlusion alarms are raised, check the drug delivery line for kinks or blockages and ensure the stopcock is in the correct delivery position.
- If either drug pump is listed as disabled, the pumps may be primed by selecting the component and confirming the prompt on the Controller to enable drug pump functionality.
- If one of the drug pumps is behaving abnormally with no specific alarm occurring, try stopping and restarting cardioplegia flow prior to doing a System Restart or Console Swap Out.

4.4.3 Bubble Trap Errors

- If unexpected venting occurs, check for micro bubbles around the Fluid Level Sensor in the heat exchanger. If present, stop flow and tap on the face of the heat exchanger to release the bubbles.
- If unexpected venting occurs, ensure the heat exchanger is fully locked on to the console.
- If the vent valve is constantly open and not closing, ensure that vent mode is not turned on (Vent icon on Controller should be grey).
- If the vent valve is constantly open and the system is not in vent mode, navigate to the Prime screen and start the Auto-Prime process with a primed disposable set. If the Controller does not display a yellow message asking if there is fluid in the bubble trap, then power off the system and contact Quest Medical Technical Support personnel to replace the Fluid Level Sensor.

4.4.4 System and Internal Error Alarms (Non-Recoverable Alarms)

- Constant System and/or Internal Error alarms are usually an indication of more serious problems with the instrument.
- System and Internal Errors are designed to be displayed in instances of possible external electrical disturbance such as ESD, EMI and/or EMC. In addition, the alarm may be presented due to unintentional electro-static discharge from the user when interacting with the disposable set.
- Occasionally, a system will display a one-time System/Internal Error that can be corrected by following the direction on the screen. Restart system and select Resume case to retest. Contact Quest Medical Technical Support for assistance if the problem persists.

4.4.5 Delivery temperature reads more than 5º above water temperature

- It is likely that the IR temperature sensor, behind the heat exchanger, has a dirty lens. Clean the lens with water and a soft cloth.
- If wiping the sensor does not fix the issue, ensure that there is not a heat source pointed at the heat exchanger or making contact with it.

4.4.6 Delivery/Vent Valve Errors

- The antegrade, retrograde, or vent valve may have debris or buildup in the mechanism. Rinse the valve with warm water and actuate the valve manually several times to clear the debris.

4.4.7 Low/No Water Flow in Water Circuit

- The water circuit may not be properly primed.
  - Ensure the heater/cooler unit is properly filled with water and primed per manufacturer recommendations.
  - Check the water lines to ensure they are properly connected to the correct inlet and outlet ports.
  - Check the water lines to ensure they are not kinked or blocked.
- Ensure the heater/cooler unit is in the correct mode and able to flow properly.

4.4.8 Cannot Close Door

- If the door is opened while the delivery set is primed, blood will fill the cassette and make it difficult to close the door. To close the door, clamp the source lines, manually open the vent valve, and depress both cassette chambers until most of the fluid is evacuated. Release the vent valve and close the door.

4.4.9 Cannot Install Heat Exchanger

- Refer to section 8.1.1 in the MPS 3 or MPS 3 ND Operations Manual for details on installation of the heat exchanger
- Verify that the locking knob is fully unlocked by rotating it counterclockwise.
- Verify that the locking knob is in the correct orientation to secure the 10-convolution or 16-convolution heat exchanger. Refer to section 8.1.1 in the Operations Manual for full details.

4.4.10 Inadequate Fill Alarms/Delay in Delivery

- If Inadequate Fill alarms are repeatedly encountered, the source pressures need to be increased. Increase the blood source pressure or increase the head height and/or utilize a pressure cuff for the crystalloid source.
- When delivering in Recirc or Vent modes, always ensure there is a positive pressure seen in the heat exchanger. If the cardiotomy reservoir is below the vent, a siphon effect can occur and empty the pump cassette which could cause a delay in delivery as the cassettes will need to be refilled before delivery can resume.

4.4.11 Battery Not Charged/Charging While Not in Use

- In order to charge the battery while the system is not in use, ensure the power cord is plugged into a power outlet and the main power switch is in the ON position. The power switch's orange indicator light should be illuminated.

4.4.12 Air in the Delivery Line

- If Air in Line alarms are repeatedly encountered, check the delivery line tubing and ensure it is fully inserted into the Air in Line sensor.
- If alarm is still occurring when the tubing is fully inserted in the sensor, put the system in Hold Volume mode and continue flow until no more Air in Line alarms occur.

4.5 Console or Controller Change Out

It is recommended to change out either the Console or Controller when the MPS 3 system becomes unusable, even after following the corrective actions and troubleshooting suggestions in this manual.

If a Console needs to be replaced during a case:

1. Stop flow
2. Select Shutdown with Alarm button or Rear switch
3. Clamp source and delivery lines
4. Remove disposable set from system
5. Unplug power cord, Controller communications cable from Console, circulation inlet and outlet lines, and any additional accessories connected to the rear of the console
6. If on Pole Mount, remove Console Pole Mount locking pin from foot.
7. Replace the console
8. Connect power cord, Controller communications cable to console, circulation inlet and outlet lines (ensure adequate water in circulation system) and any required accessories
9. Turn on console with Rear and Standby switches. After system diagnostics is complete, select SWAP on Alarm 314
10. Select SAME CNTLR on Alarm 315
11. Select RESUME CASE to recall all previous case parameters
12. If using a Hypothermic Reservoir, prime the circulation system by selecting Temp Settings → H2O Prime. If using a Heater-Cooler Unit, resume flow from Heater-Cooler Unit.

If a Controller need to be replaced during a case:

1. Stop flow
2. Select Shutdown with Alarm button or Standby Switch on the front of the Console (hold for 3 seconds and wait for switch to turn orange)
3. Remove Controller from Mounting Arm
4. Disconnect Controller communications cable from Console
5. Replace Controller
6. Connect Controller communications cable to Console, and required accessories to new Controller
7. Turn on console Standby switch (hold for 3 seconds and wait for switch to turn blue).
8. After system diagnostics is complete, select SWAP on Alarm 314
9. Select DIFF CNTLR on Alarm 315
10. Select NEW CASE to setup parameters either manually or via a protocol

If this manual does not remedy the situation please call Quest Medical Technical Support at +1 (888) 510-7623.